PTS LITE

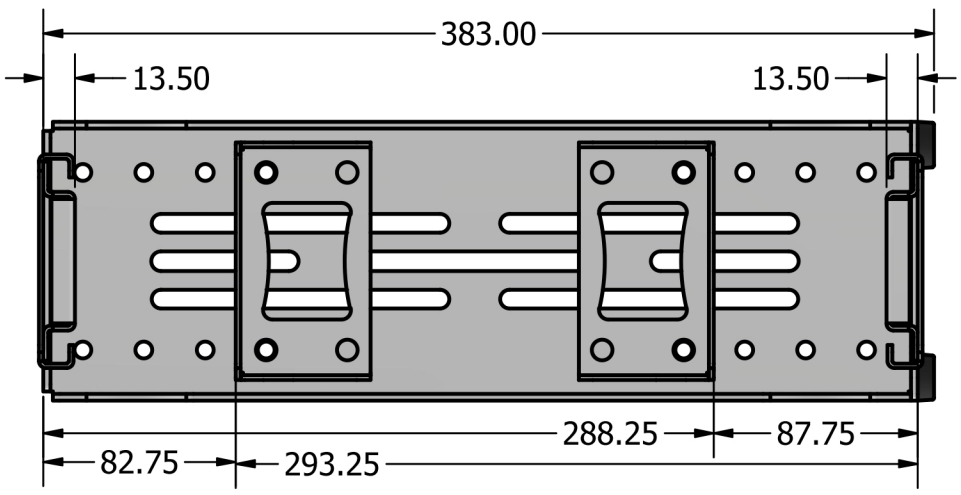
383.00
13.50
13.50
288.25
87.75
82.75
293.25

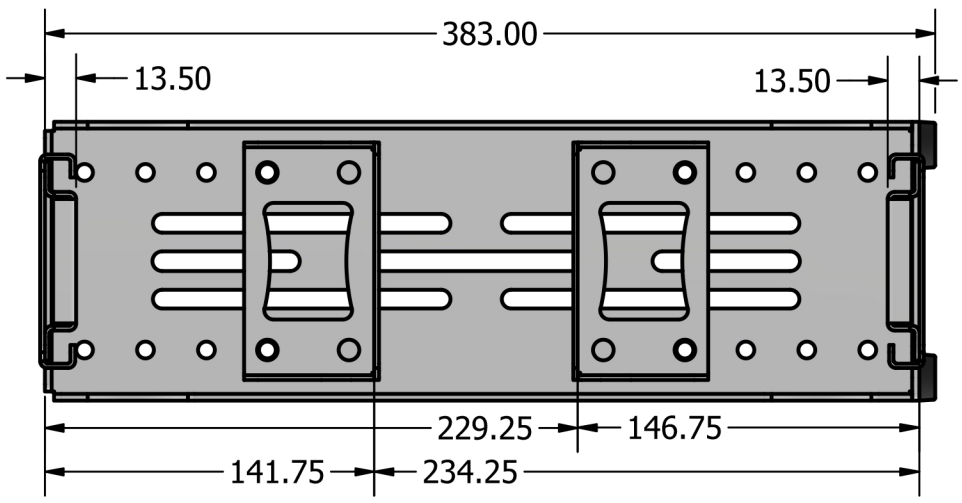
383.00
13.50
13.50
229.25
146.75
141.75
234.25

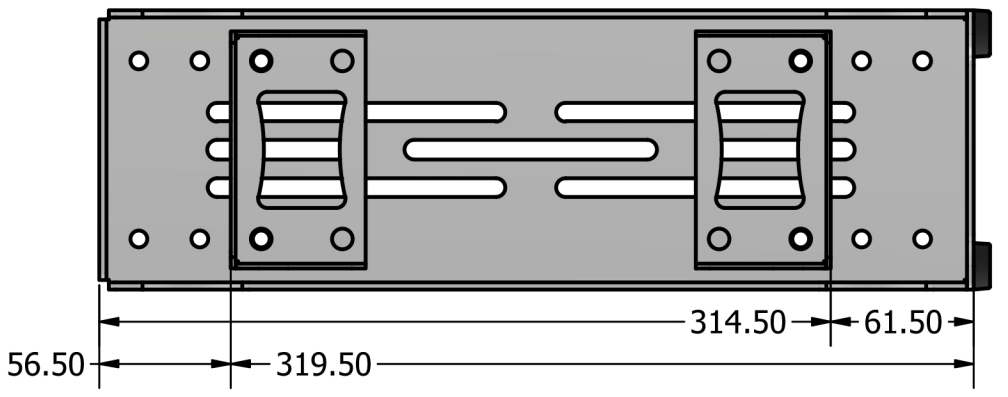
314.50
61.50
56.50
319.50

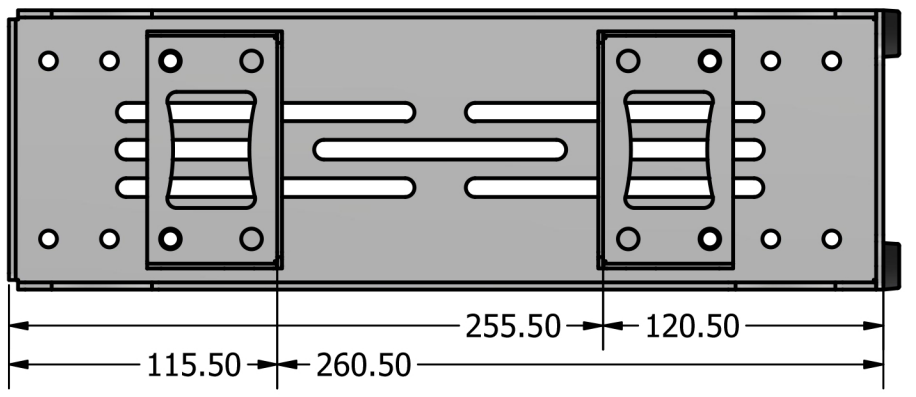
255.50
120.50
115.50
260.50

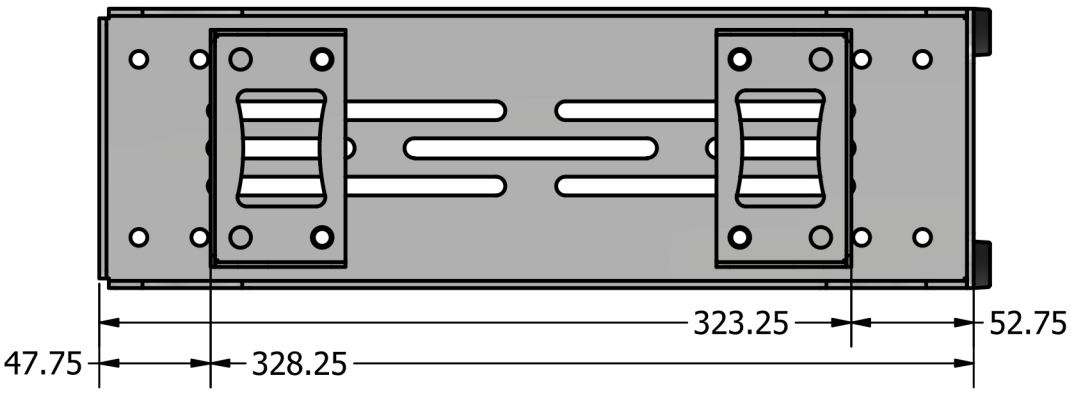
323.25
52.75
47.75
328.25

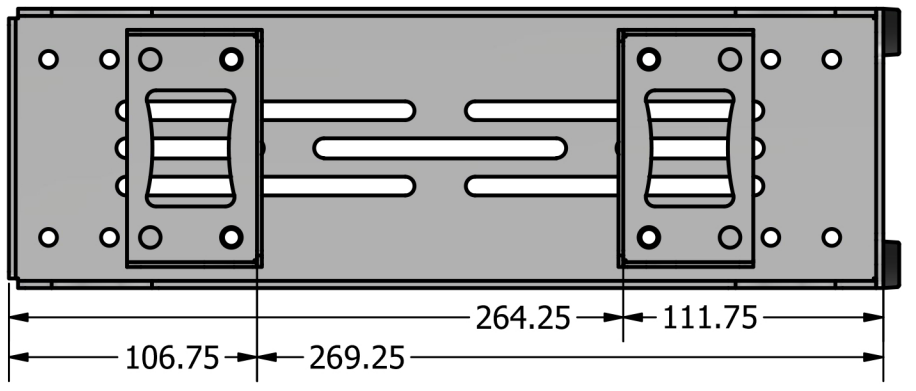
264.25
111.75
106.75
269.25

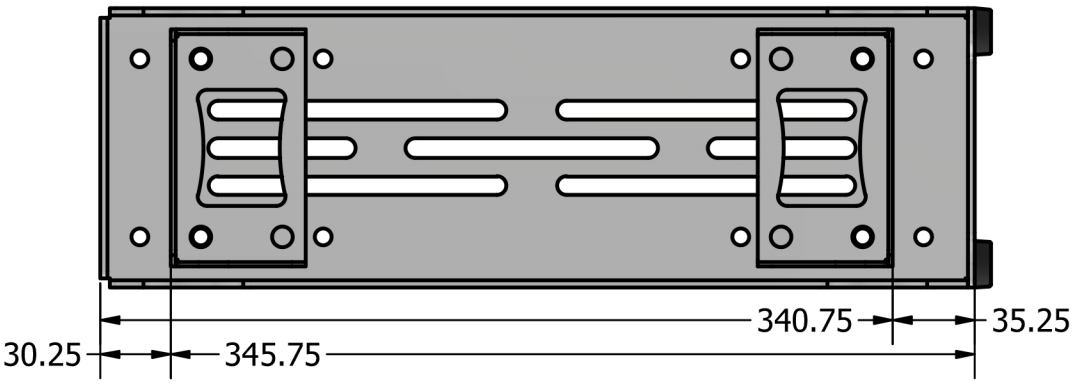
340.75
35.25
30.25
345.75

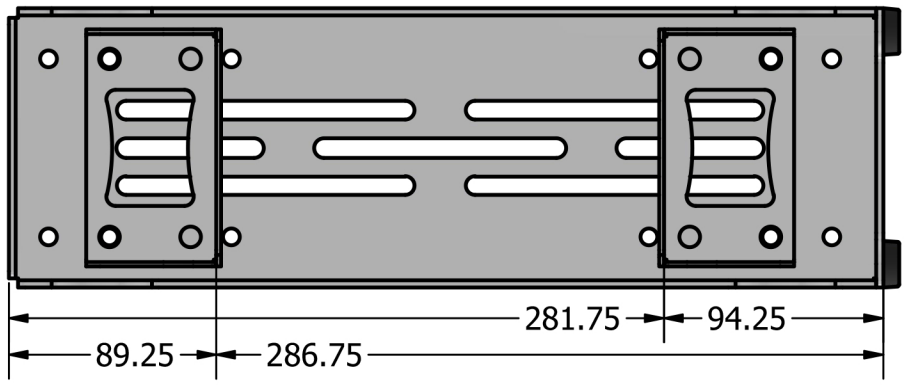
281.75
94.25
89.25
286.75

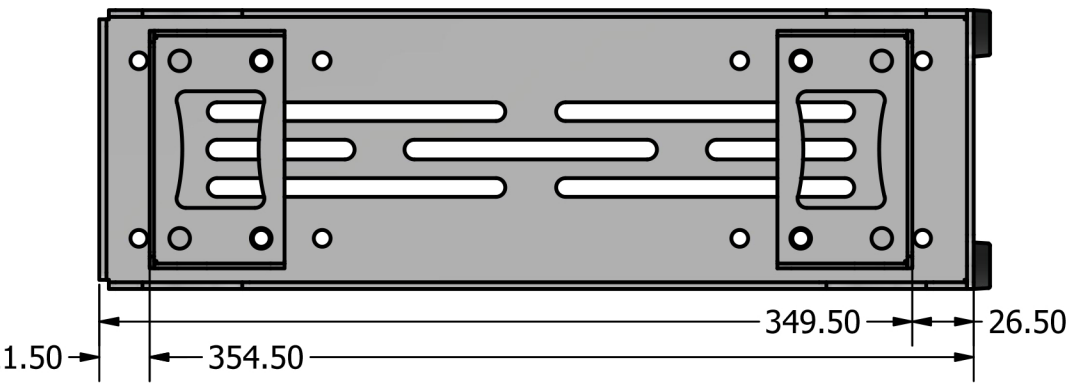
349.50
26.50
21.50
354.50

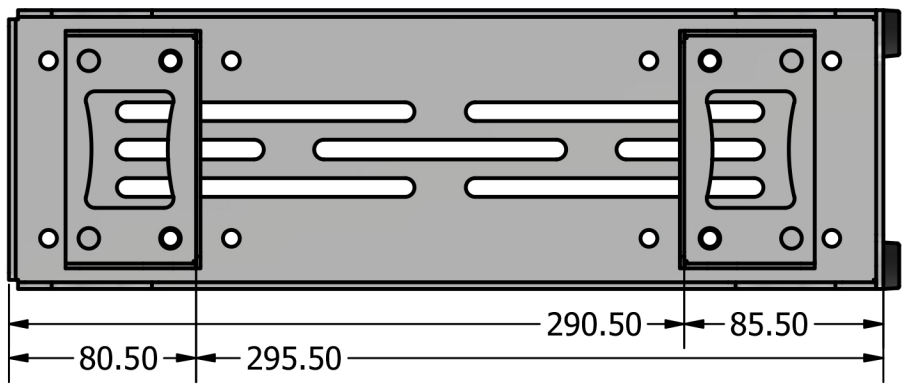
290.50
85.50
80.50
295.50

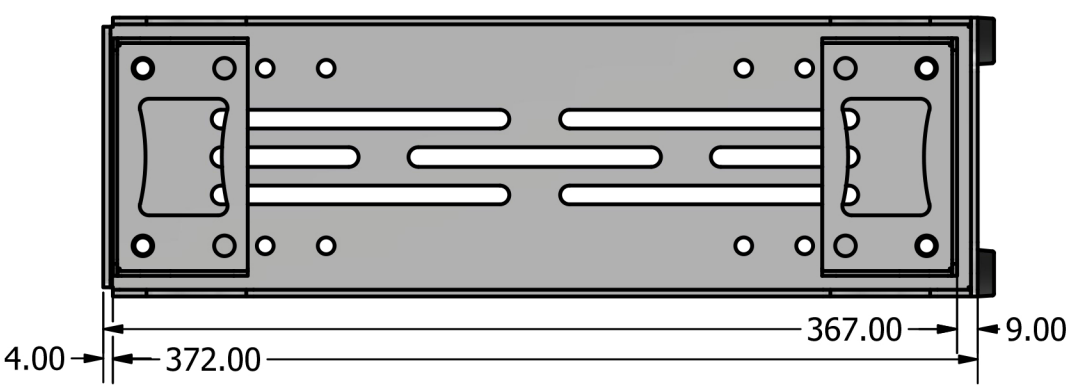
367.00
9.00
4.00
372.00

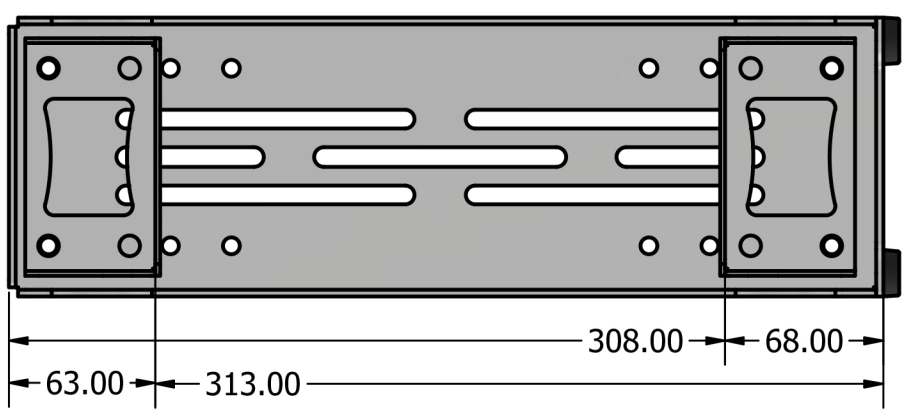
308.00
68.00
63.00
313.00